5118 7" ANGLE GRINDER

EXPLODED VIEW

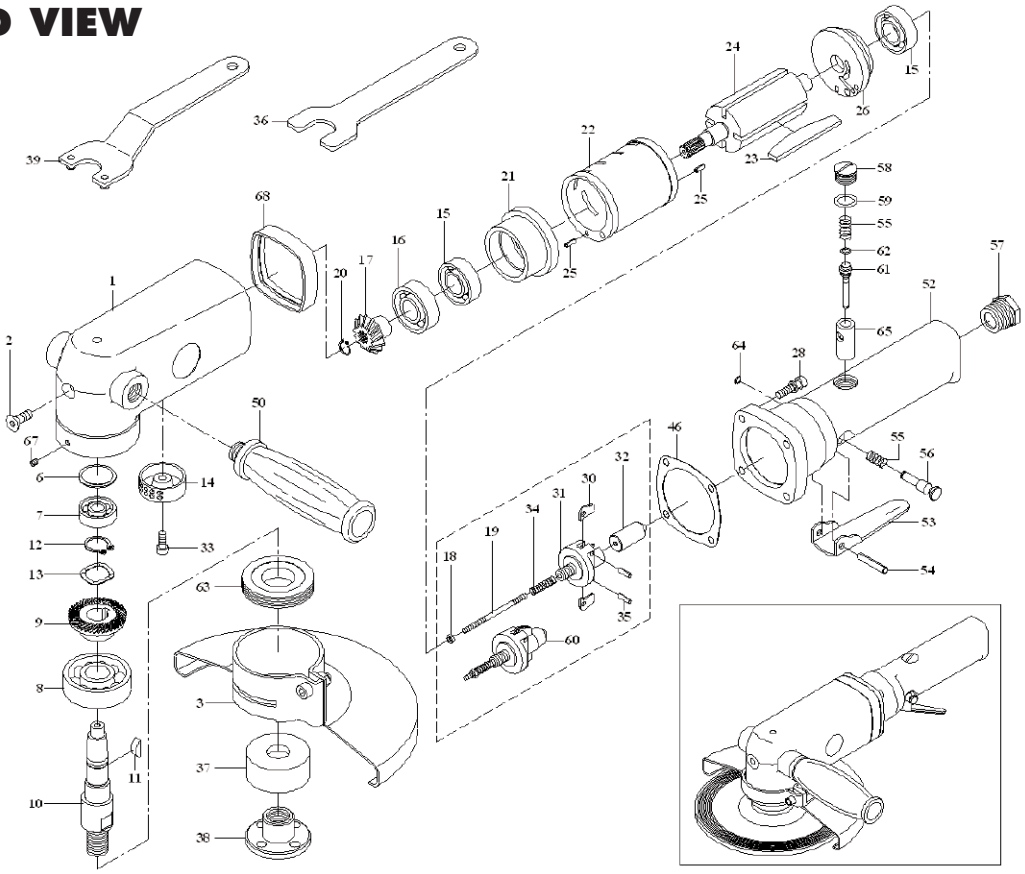

PARTS LIST — FOR REFERENCE ONLY

Index Number	Part Number	Description	Qty.
1	831001	Body	1
2	MT001	Screw	1*
3	831003A	Disc Cover	1
4	831004	Disc Nut	1
5	831005	Disc Receiver	1
6	831006	Spacer	1
7	B629ZZ	Ball Bearing	1
8	B6303ZZ	Ball Bearing	1
9	831009	Bevel Gear	1
10	831010L	Gear Shaft	1
11	KR003	Key	1
12	C15	Retaining Ring	1
13	WW15	Spring Washer	1
14	831014	Exhaust Deflector	1
15	B6201	Ball Bearing	2
16	B6202	Ball Bearing	1
17	831017	Bevel Pinion	1
18	NH3	Adjust Nut	1
19	831019	Adjust Screw	1
20	C9	Retaining Ring	1
21	831021	Front Plate	1
22	831022	Cylinder	1
23	831023	Rotor Blade	4
24	831024	Rotor	1
25	SP025	Spring Pin	2

Index Number	Part Number	Description	Qty.
26	831026	Rear Plate	1
28	CAP016	Cap Screw	4
30	831030	Pendulum	8
31	831031	Governor	1
32	831032	Plunger	1
33	CAP017	Screw	1
34	S024	Spring	1
35	SP015	Spring Pin	2
36	829048	Stop Spanner	1
37	831005LA	Disc Receiver	1
38	915005	Pad Nut	1
39	829047	Disc Spanner	1
46	831046	Gasket	1
50	829027	Dead Handle	1
52	831052a	Governor Case	1
53	831053	Lever	1
54	SP028	Spring Pin	1
55	S028	Valve Spring	2
56	831056	Safe Lever	1
57	831057	Hose Adapter	1
58	832052	Valve Screw	1
59	OR033	O-Ring	1
60	831H01	Governor Assembly	1
61	831061	Valve Pin	1
62	OR034	O-Ring	1
63	831063	Nut	1
64	C5	Retaining Ring	1
65	831065	Valve Brushing	1
67	MS006	Set	1
68	829049	Rubber	1
69	829047	Disc Spanner	1

TECHNICAL DATA

	Max Air Pressure	Recommended Air Hose Size	RPM Free Speed	Max Air Flow CFM	Weight (lb)
5118 (Formerly 5008A)	90 psi	1/2"	7,000	3.5	7.9

FOOTNOTES

* Parts Available in 5008A-RK *

EAGLE INDUSTRIES

10000 SE Pine Street
Portland, OR 97216
877-273-3903
FAX 800-959-6601

When ordering spare parts, please specify tool type, part number and description.

REVISED 03/07