α ALPHA 60MC, 60DMC OIL-PULSE TOOLS

EXPLODED VIEW

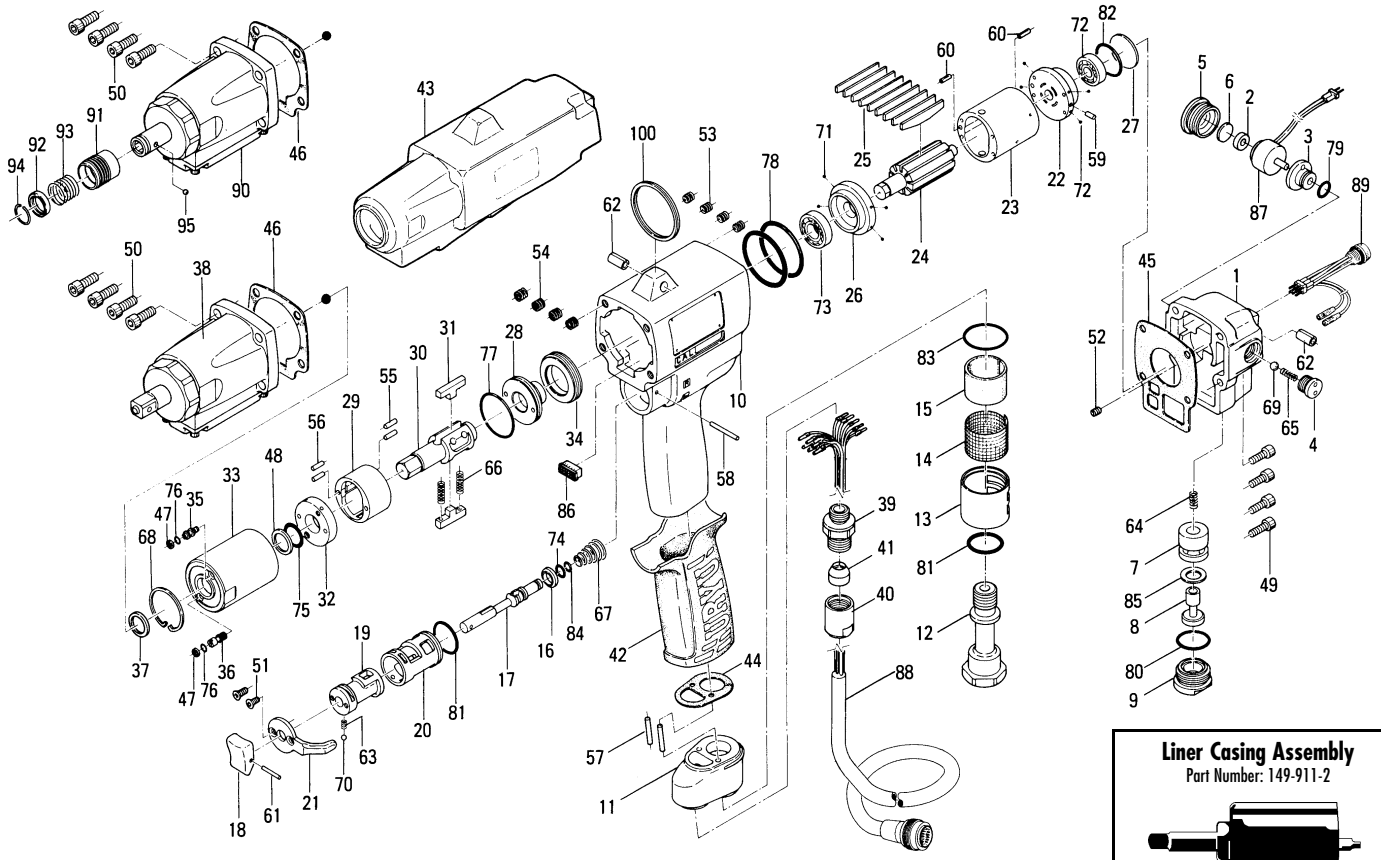

Liner Casing Assembly
Part Number: 149-911-2

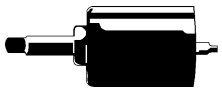

PARTS LIST — FOR REFERENCE ONLY

Index Number	Part Number	Description	Qty.
1	149-012-2	Head Cover	1
2	193-120-6	Valve Packing Spacer	1
3	193-147-6	Stop Valve Bushing	1
4	193-148-6	Stop Valve Cover	1
5	193-149-6	Stop Valve Plug	1
6	193-872-6	Valve Packing	1
7	149-253-5	Shut-Off Valve Bushing	1
8	149-254-5	Shut-Off Valve	1
9	149-927-5	Shut-Off Valve Cover	1
10	149-025-2	Casing	1
11	149-035-5	Casing Connector	1
12	149-091-5	Air Inlet Bushing	1
12-1	148-093-7	Airinlet Bushing Screen	1
13	173-780-0	Exhaust Stack	1
14	173-042-0	Silencer	1
15	173-835-0	Filter	1
16	173-100-0	Valve	1
17	173-104-0	Valve Rod	1
18	149-107-2	Valve Lever	1
19	151-210-4	Reverse Valve	1
20	151-211-4	Reverse Valve Bushing	1
21	173-212-0	Reverse Lever	1
22	149-285-2	Rear Plate	1
23	149-286-2	Cylinder	1
24	161-287-3	Rotor	1
25	161-288-3	Blade	9
26	149-289-2	Front Plate	1
27	193-291-6	Rear Plate Spacer	1
28	196-901-4	Rear Liner Plate	1
29	177-902-5	Liner	1
30	149-319-2	Anvil	1
31	177-440-5	Driving Blade	2
32	178-904-8	Front Liner Plate	1
33	177-905-6	Liner Casing	1
34	190-906-6	Liner Casing Setter	1
35	174-907-8	Relief Valve Spindle	1

Index Number	Part Number	Description	Qty.
36	178-742-0	Oil Plug	1
37	178-327-9	Anvil Front Spacer	1
38	850-470-1	Sensor Casing Assembly	1
39	149-079-5	Connector	1
40	149-018-5	Cap	1
41	149-562-6	Stopper	1
42	173-842-0	Handle Cover	1
43	149-840-2	Handle Protector	1
44	149-850-5	Casing Connector Packing	1
45	149-853-2	Head Cover Packing	1
46	149-867-2	Front Casing Packing	1
47	944-002-0	Supporting Ring (2.6 x 4.5 x 1)	2
48	944-214-0	Supporting Ring (12 x 15.9 x 1.5)	1
49	945-014-0	Allen Head Bolt (M4 x 14)	4
50	945-117-0	Allen Head Bolt (M5 x 16)	4
51	948-423-0	Allen Flush Head Screw (M3 x 6)	2
52	954-005-0	Allen Head Dog Point Screw (M3 x 5)	1
53	965-006-0	Heli-Sert (M4 x 1.5D)	4
54	965-011-0	Heli-Sert (M5 x 1.5D)	4
55	970-130-0	Pin (H) (2.45 x 4.5)	2
56	970-135-0	Pin (H) (2.45 x 11)	2
57	970-208-0	Pin (H) (3 x 10)	2
58	971-125-0	Pin (2 x 25)	1
59	973-005-0	Roll Pin (2 x 5)	1
60	973-008-0	Roll Pin (2 x 8)	2
61	973-014-0	Roll Pin (2 x 14)	1
62	973-340-0	Roll Pin (6 x 10)	2
63	976-006-0	Spring (3 x 5) (04)	1
64	976-057-0	Spring (4.5 x 14) (0.5)	1
65	976-240-0	Spring (3 x 14) (04)	1
66	976-791-0	Spring (3.3 x 21) (0.4) WPC	2
67	977-160-0	Cone Spring (7.4 x 14 x 20)	1
68	978-282-0	Snap Ring (28 x 1)	1
69	981-791-0	Ball (5) WPC	1
70	981-002-0	Ball (1/8)	1
71	981-045-0	Ball (1.5)	8

Index Number	Part Number	Description	Qty.	
72	982-401-0	Ball Bearing (EE-2)	1	
73	982-402-0	Ball Bearing (EE-3)	1	
74	990-002-0	O-Ring (P4)	1	
75	990-152-0	O-Ring (P12) (NTN)	1	
76	990-320-0	O-Ring (ARP568-003)	2	
77	990-329-0	O-Ring (JW1530 -19)	1	
78	990-337-0	O-Ring (JW1530-27)	2	
79	990-905-0	O-Ring (SNS-7)	1	
80	990-914-0	O-Ring (SNS-16)	1	
81	990-916-0	O-Ring (SNS-18)	2	
82	990-918-0	O-Ring (SNS-20)	1	
83	990-921-0	O-Ring (SNS-22.4)	1	
84	990-972-0	O-Ring (SNS-4) (NOK)	1	
85	996-418-0	Packing (15 x 9 x 1)	1	
86	909-918-0	Socket (DF11-12DC-2C)	1	
87	909-915-0	Solenoid Valve Assembly	1	
88	909-926-0	Joint Cable Assembly (WHITE)	1	
89	909-920-0	LED Lamp Assembly	1	
90	850-476-1	Sensor Casing Assembly	1	■
91	011-351-1	Bit Sleeve	1	■
92	011-352-1	Bit Spacer	1	■
93	976-327-0	Spring (13.5 x 11) (0.9)	1	■
94	978-117-0	Snap Ring (11.7 x 1.0)	1	■
95	981-002-0	Ball (1/8)	1	■

ACCESSORIES

96	904-090-0	Extension Bar (3/8 x 43)	1
97	971-214-0	Pin (3 x 14)	1
98	990-011-0	O-Ring (P12)	1
99	953-104-0	Allen Head Flat Point Screw (M4 x 4)	1
100	004-790-2	Suspension Ring	1
101	939-091-0	Allen Wrench (1.5mm)	1

FOOTNOTES

■ = Parts for Alpha 60DMC

AIMCO also offers a complete line of standard & special adapters, bits, sockets and extensions.

When ordering spare parts, please specify tool type, part number and description.

AIMCO
10000 SE PINE, PORTLAND, OR 97216
503-254-6600 FAX 503-255-2615

REVISED 5/01