α ALPHA 90 OIL-PULSE TOOLS

EXPLODED VIEW

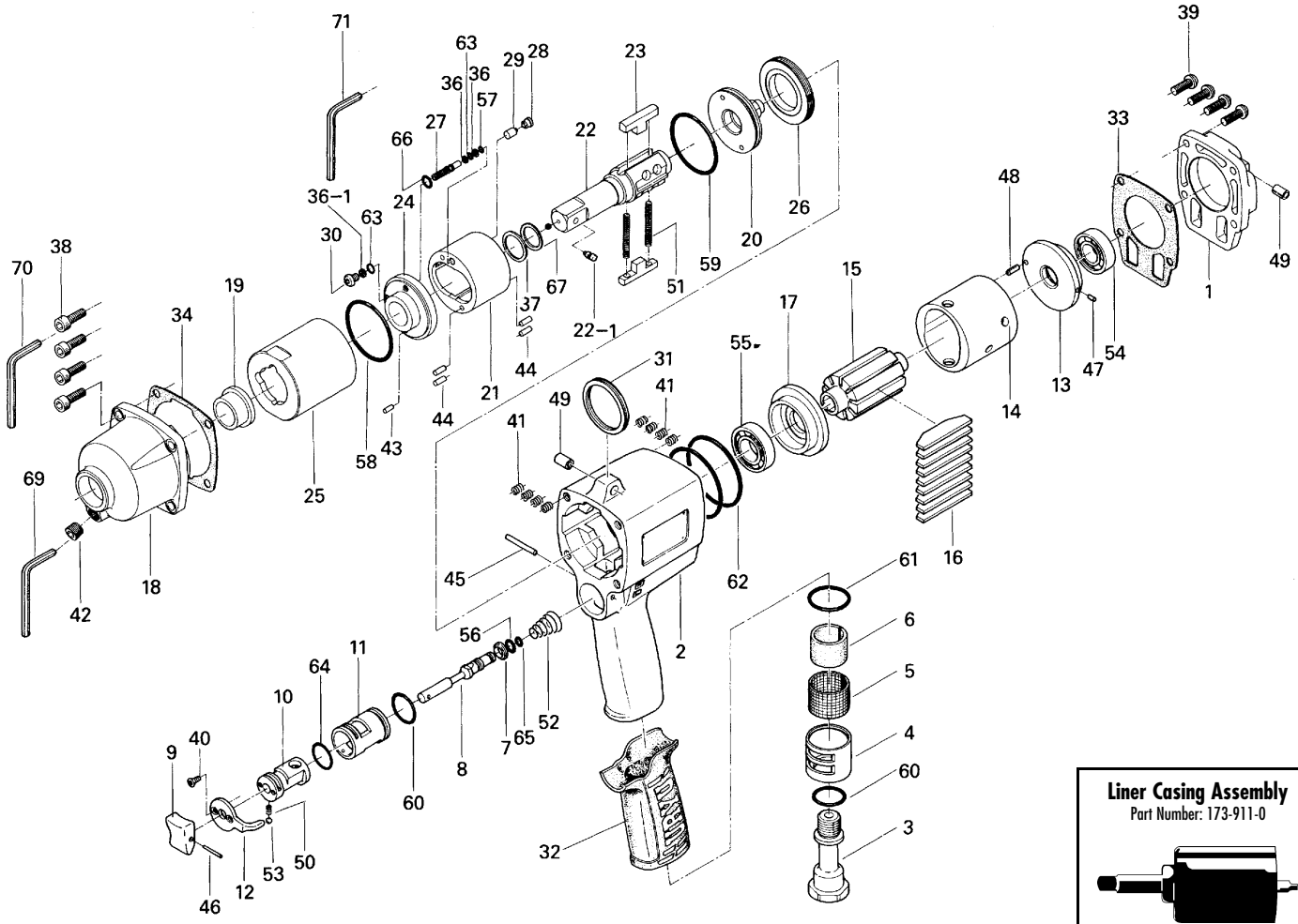

Liner Casing Assembly
Part Number: 173-911-0

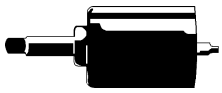

PARTS LIST — FOR REFERENCE ONLY

Index Number	Part Number	Description	Qty.
1	194-012-3	Head Cover	1
2	173-025-0	Handle	1
3	173-091-0	Air Inlet Bushing	1
4	173-780-0	Exhaust Stack	1
5	173-042-0	Silencer	1
6	173-835-0	Filter	1
7	173-100-0	Valve	1
8	173-104-0	Valve Rod	1
9	177-107-5	Valve Lever	1
10	173-210-0	Reverse Valve	1
11	173-211-0	Reverse Valve Bushing	1
12	173-212-0	Reverse Lever	1
13	173-285-0	Rear Plate	1
14	173-286-0	Cylinder	1
15	173-287-0	Rotor	1
16	151-288-9	Blade (PC)	9
17	173-289-0	Front Plate	1
18	194-439-3	Front Casing	1
19	188-328-2	Anvil Bushing	1
20	194-901-3	Rear Liner Plate	1
21	194-902-3	Liner	1
22	891-311-1	Anvil (OP-P) Assembly	1
22-1	891-304-1	Socket Pin Assembly (1/2)	1
23	194-440-3	Driving Blade	2
24	194-904-3	Front Liner Plate	1

Index Number	Part Number	Description	Qty.
25	194-905-3	Liner Casing	1
26	194-906-3	Liner Casing Setter	1
27	194-907-3	Relief Valve Spindle	1
28	194-969-2	Relief Valve Plug	1
29	194-970-2	Relief Valve	1
30	194-742-3	Oil Plug	1
31	004-790-2	Suspension Ring	1
32	173-842-0	Handle Cover	1
33	194-853-3	Head Cover Packing	1
34	194-867-3	Front Casing Packing	1
36	944-002-0	Supporting Ring (2.6 x 4.5 x 1)	2
36-1	944-003-0	Supporting Ring (3 x 5 x 1)	1
37	944-215-0	Supporting Ring (16 x 19.9 x 1.5)	1
38	945-117-0	Allen Head Bolt (M5 x 16)	4
39	945-955-0	Hexagon Round Head Bolt (M5 x 16)	4
40	948-423-0	Allen Flush Head Screw (M3 x 6)	2
41	965-011-0	Heli-Sert (M5 x 1.5D)	8
42	966-100-0	Allen Head Plug (1/8)	1
43	969-450-0	Pin (G) (3 x 8)	1
44	970-206-0	Pin (H) (3 x 8)	4
45	971-125-0	Pin (2 x 25)	1
46	973-014-0	Roll Pin (2 x 14)	1
47	973-066-0	Roll Pin (2.5 x 6)	1
48	973-068-0	Roll Pin (2.5 x 8)	1
49	973-340-0	Roll Pin (6 x 10)	2

Index Number	Part Number	Description	Qty.
50	976-006-0	Spring (3 x 5)	1
51	976-794-0	Spring (3.8 x 33 x 0.5) WPC	2
52	977-160-0	Cone Spring (7.4 x 14 x 20)	1
53	981-002-0	Ball (1/8)	1
54	982-403-0	Ball Bearing (EE-4)	1
55	982-950-0	Ball Bearing (16002)	1
56	990-002-0	O-Ring (P4)	1
57	990-320-0	O-Ring (ARP568-003)	1
58	990-338-0	O-Ring (JW1530-28)	1
59	990-607-0	O-Ring (34 x 2.3)	1
60	990-916-0	O-Ring (SNS-18)	1
61	990-921-0	O-Ring (SNS-22.4)	1
62	990-938-0	O-Ring (SNS-48)	2
63	990-970-0	O-Ring (SNS-2) (NOK)	2
64	990-914-0	O-Ring (SNS-16)	1
65	990-972-0	O-Ring (SNS-4) (NOK)	1
66	990-973-0	O-Ring (SNS-5) (NOK)	1
67	990-156-0	Teflon Seal (P16)	1

ACCESSORIES

69	939-104-0	Allen Wrench (5mm)	1
70	939-105-0	Allen Wrench (4mm)	1
71	939-109-0	Allen Wrench (2mm)	1

FOOTNOTES

AIMCO also offers a complete line of standard & special adapters, bits, sockets and extensions.

When ordering spare parts, please specify tool type, part number and description.

AIMCO
10000 SE PINE, PORTLAND, OR 97216
503-254-6600 FAX 503-255-2615

REVISED 4/01