UAG-90 SERIES AIR GRINDER

EXPLODED VIEW

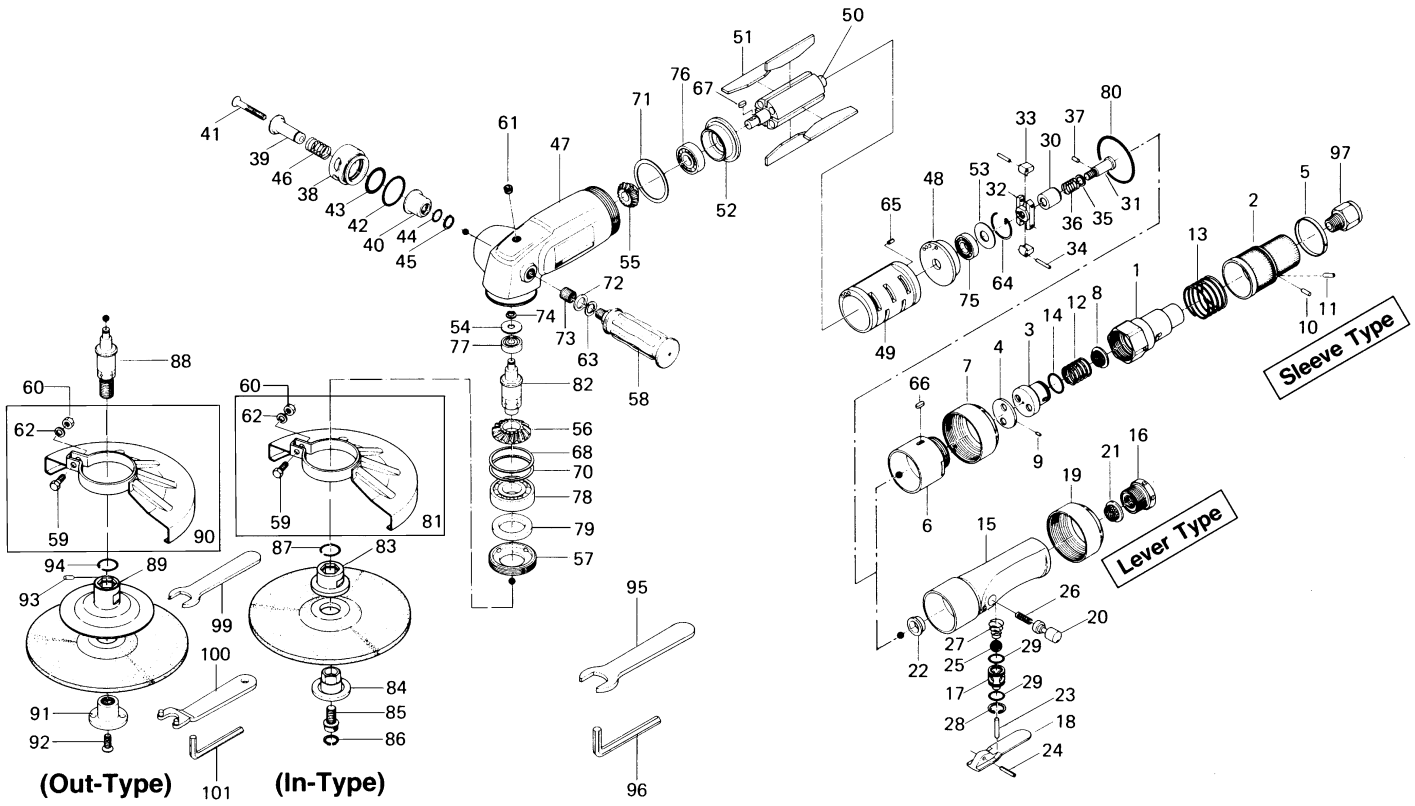

PARTS LIST — FOR REFERENCE ONLY

Index Number	Part Number	Description	Qty.	
1	591-014-6	Valve Body	1	❍
2	591-015-6	Valve Handle	1	❍
3	591-100-6	Valve	1	❍
4	591-102-6	Valve Seat	1	❍
5	591-670-6	Band	1	❍
6	593-729-6	Handle Body Connector	1	❍
7	593-736-4	Valve Body Nut	1	❍
8	573-835-9	Filter	1	❍
9	970-204-0	Pin (H) (3 x 6)	1	❍
10	972-108-0	Roller Pin (4 x 8)	1	❍
11	973-008-0	Roll Pin (2 x 8)	1	❍
12	976-533-0	Spring (23 x 20) (1.4)	1	❍
13	976-736-0	Spring (40.5 x 25) (2.0)	1	❍
14	990-919-0	O-Ring (SNS-22)	1	❍
15	593-014-3	Valve Body	1	■
16	519-091-6	Air Inlet Bushing	1	■
17	591-101-7	Valve Bushing	1	■
18	593-107-3	Valve Lever	1	■
19	593-736-4	Valve Body Nut	1	■
20	585-765-1	Safety Pin	1	■
21	573-835-9	Filter	1	■
22	591-171-7	Governor Valve Bushing	1	
23	970-323-0	Pin (H) (4 x 23)	1	■
24	973-174-0	Roll Pin (3.5 x 24)	1	■
25	981-214-0	Ball (1/2)	1	■
26	976-114-0	Spring (6 x 18) (0.55)	1	■
27	977-260-0	Cone Spring (10 x 16 x 16)	1	■
28	979-011-0	Inner Snap Ring (18)	1	■
29	990-913-0	O-Ring (SNS-15)	2	■
30	593-170-3	Governor Valve	1	✕
31	593-176-4	Governor Spindle	1	✕
32	591-181-7	Governor Cage	1	✕
33	593-183-3	Governor Weight	2	✕
34	973-120-0	Roll Pin (3 x 20)	2	✕
35	975-728-0	Adjusting Spacer (13 x 10 x T)	1	✕
36	976-334-0	Spring (13.3 x 21.5) (1.6)	1	✕
37	970-205-0	Pin (H) (3 x 7)	1	✕
38	591-780-7	Exhaust Stack	1	▼
39	591-787-7	Exhaust Cover Retainer	1	▼
40	591-782-6	Exhaust Cover	1	▼
41	948-568-0	Allen Flush Head Bolt (M6 x 45)	1	▼
42	990-927-0	O-Ring (SNS-34)	1	▼
43	990-503-0	O-Ring (G-30)	1	▼
44	990-911-0	O-Ring (SNS-12)	1	▼
45	979-109-0	Outer Snap Ring (12)	1	▼
46	976-358-0	Spring (14.4 x 26)	1	▼
47	593-025-4	Casing	1	
48	593-285-3	Cylinder Rear Plate	1	
49	593-286-3	Cylinder	1	
50	593-287-3	Rotor	1	
51	593-288-3	Blade	4	
52	593-289-4	Front Plate	1	
53	591-291-6	Cylinder Rear Plate Spacer	1	
54	537-391-0	Wheel Spindle Rear Cover	1	
55	593-420-3	Driving Gear	1	
56	593-430-3	Driven Gear	1	
57	591-065-6	Casing Front Cover	1	
58	566-720-2	Dead Handle	1	
59	946-904-0	Hexagon Head Bolt (M6 x 22)	1	
60	960-041-0	Hexagon Head Nut (1-M6)	1	
61	966-100-0	Allen Head Plug (1/8)	1	
62	962-009-0	Spring Washer (2-6S)	1	
63	962-013-0	Spring Washer (2-12S)	1	
64	978-338-0	Snap Ring (34 x 1.2)	1	
65	973-158-0	Roll Pin (3.5 x 8)	1	
66	974-001-0	Key (3 x 2.5 x 11)	1	
67	974-008-0	Key (3 x 8)	1	
68	975-376-0	Spacer (47 x 43 x 1)	1	
70	975-881-0	Adjusting Spacer (47 x 43 x T)	1	
71	975-883-0	Adjusting Spacer (48 x 38 x T)	1	
72	975-095-0	Spacer (18 x 13 x 1)	1	
73	965-058-0	Heri-Sert (M12 x 1)	1	
74	979-104-0	Outer Snap Ring (7)	1	
75	982-141-0	Ball Bearing (6001Z)	1	
76	982-241-0	Ball Bearing (6201Z)	1	
77	982-022-0	Ball Bearing (627)	1	
78	982-244-0	Ball Bearing (6204Z)	1	
79	993-040-0	Felt Ring (28 x 42 x 5)	1	
80	990-942-0	O-Ring (SNS-56)	1	
81	593-770-6	Wheel Guard	1	●
82	591-390-6	Wheel Spindle (IN)	1	●
83	591-393-6	Wheel Holder Flange	1	●
84	591-394-6	Wheel Nut Flange	1	●
85	945-993-0	Hexagon Socket Flange Head Bolt (M18 x 18)	1	●
86	979-317-0	Inner Snap Ring (IRWT-17)	1	●
87	978-209-0	Snap Ring (21 x 1.2)	1	●
88	591-390-3	Wheel Spindle (OUT)	1	✸
89	564-393-4	Wheel Holder Flange	1	✸
90	593-770-4	Wheel Guard	1	✸
91	518-394-7	Wheel Nut Flange	1	✸
92	948-453-0	Allen Head Screw (M6 x 18)	1	✸
93	973-122-0	Roll Pin (3 x 22)	1	✸
94	979-361-0	Inner Snap Ring (ISTW-20)	1	✸

ACCESSORIES

95	936-005-0	Spanner (24 x 5 x 195)	1
96	939-006-0	Allen Wrench (8mm)	1
97	942-123-0	Connecting Screw (3/8 x NPT3/8)	1
99	936-524-0	Spanner (24)	1
100	938-057-0	Spanner (6 x 30 x 170)	1
101	939-105-0	Allen Wrench (4mm)	1

When ordering spare parts, please specify tool type, part number and description.

FOOTNOTES

❍ = Parts for 593-003-4 Handle Assy (Sleeve Type)
■ = Parts for 593-003-3 Handle Assy (Lever Type)
✕ = Parts for 593-893-3 Governor Cage Assembly
▼ = Parts for 591-885-6 Silencer Assembly
● = Parts for IN-Type Wheel Setting
✸ = Parts for OUT-Type Wheel Setting

AIMCO
10000 SE PINE, PORTLAND, OR 97216
503-254-6600 FAX 503-255-2615

REVISED 5/01