UX-900S & UX-900C OIL-PULSE TOOLS

EXPLODED VIEW

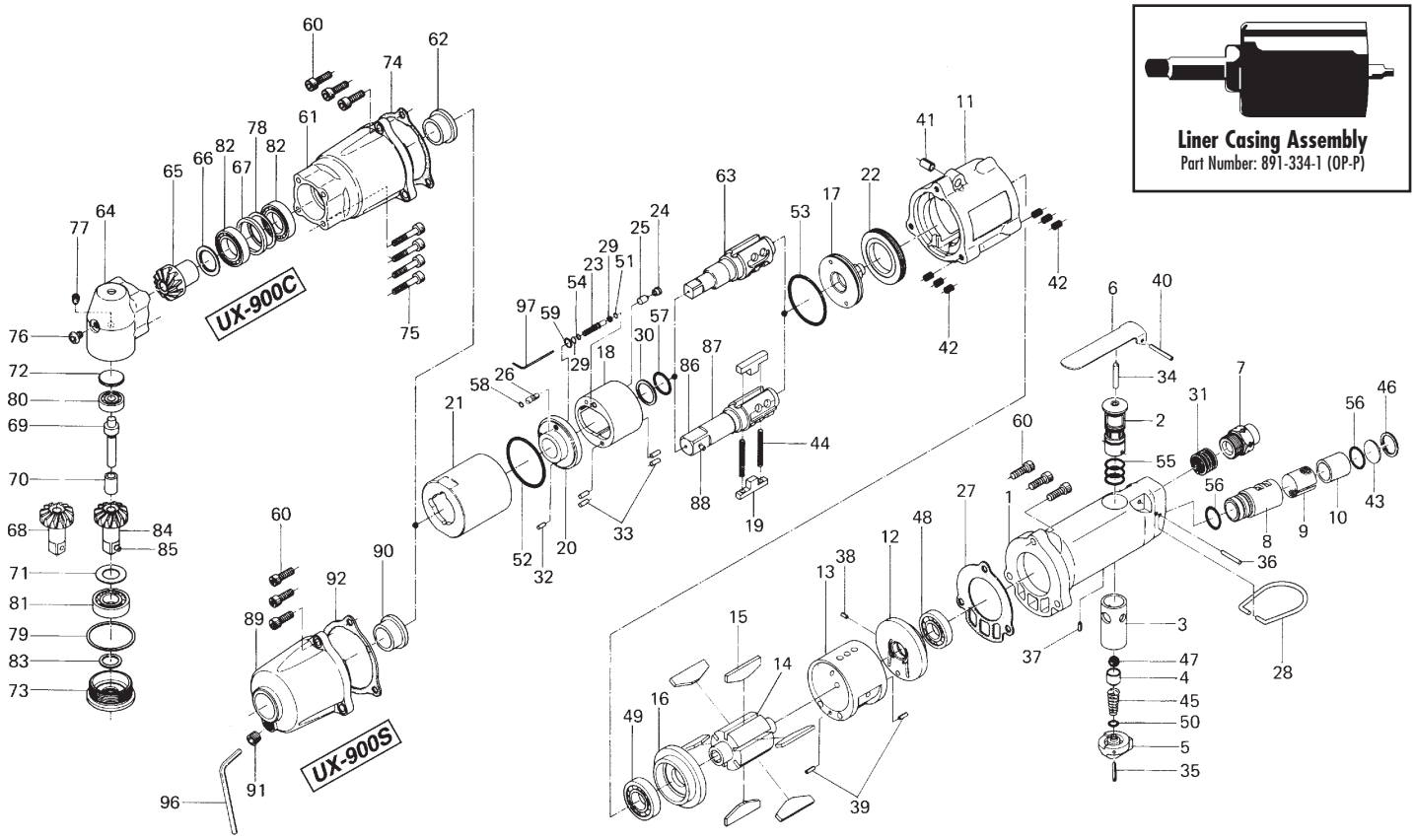

PARTS LIST — FOR REFERENCE ONLY

Index Number	Part Number	Description	Qty.	
1	180-011-7	Handle	1	
2	180-210-7	Reverse Valve	1	
3	180-211-7	Reverse Valve Bushing	1	
4	188-100-1	Valve	1	
5	180-212-7	Reverse Lever	1	
6	500-107-1	Valve Lever	1	
7	180-091-6	Air Inlet Rushing	1	
8	194-780-4	Exhaust Stack	1	
9	194-042-4	Silencer	1	
10	194-835-4	Filter	1	
11	180-025-7	Casing	1	
12	194-285-3	Rear Plate	1	
13	194-286-3	Cylinder	1	
14	194-287-3	Rotor	1	
15	194-288-3	Blade	6	
16	194-289-3	Front Plate	1	
17	194-901-3	Rear Liner Plate	1	
18	194-902-3	Liner	1	
19	194-440-3	Driving Blade	2	
20	194-904-3	Front Liner Plate	1	
21	194-905-3	Liner Casing	1	
22	194-906-3	Liner Casing Cover	1	
23	194-907-3	Relief Valve Spindle	1	
24	194-969-2	Relief Valve Cover	1	
25	194-970-2	Reliet Valve	1	
26	194-742-3	Oil Plug	1	
27	180-851-7	Handle Packing	1	
28	010-790-1	Suspension Ring	1	
29	944-002-0	Supporter Ring (2.6 x 4.5 x 1)	2	
29-1	944-003-0	Supporter Ring (3 x 5 x 1)	1	
30	944-215-0	SupporterRing (16 x 19.9 x 1.5)	1	
31	965-073-0	Heli-Sert (UNF5/8 x N6)	1	
32	969-450-0	Pin (G) (3 x 8)	1	
33	970-206-0	Pin (H) (3 x 8)	4	
34	970-326-0	Pin (H) (4 x 25)	1	
35	973-022-0	Roll Pin (2 x 22)	1	
36	971-163-0	Pin (2.5 x 23)	1	
37	973-006-0	Roll Pin (2 x 6)	1	
38	973-066-0	Roll Pin (2.5 x 6)	1	
39	973-108-0	Roll Pin (3 x 8)	2	
40	973-124-0	Roll Pin (3 x 24)	1	
41	973-340-0	Roll Pin (6 x 10)	1	
42	965-011-0	Heli-Sert (M5 x 1.5D)	6	
43	975-598-0	Round Plate (18 x 1)	1	
44	976-794-0	Spring (3.8 x 33 x 0.5) WPC	2	
45	977-103-0	Cone Spring (6 x 9.5 x 16)	1	
46	979-318-0	Inner Snap Ring (IRTW-18)	1	
47	981-208-0	Ball (Black) (5/16)	1	
48	982-403-0	Ball Bearing (EE4)	1	
49	982-950-0	Ball Bearing (16002)	1	
50	990-005-0	U-Ring (P7)	1	
51	990-320-0	O-Ring (ARPS68-003)	1	
52	990-338-0	O-Ring (JW1530-28)	1	
53	990-607-0	O-Ring (34 x 2.3)	1	
54	990-900-0	O-Ring (5N52)	1	
55	990-909-0	O-Ring (SNS11.2)	1	
56	990-914-0	O-Ring (SNS16)	2	
57	990-156-0	O-Ring (P16) WTN	1	
58	990-900-0	O-Ring (SNS2)	1	
59	990-973-0	O-Ring (SNS5)	1	
60	945-117-0	Allen Bolt (M5 x 16)	6	
61	179-439-4	Front Casing	1	◆
62	188-328-2	Anvil Bushing	1	◆
63	179-319-7	Anvil	1	◆
64	179-441-7	AngleCasing	1	◆
65	179-420-6	Driving Gear	1	◆
66	179-425-6	Driving Gear Spacer	1	◆
67	179-423-6	Driving Gear Bushing Spacer	1	◆
68	020-430-1	Driven Gear (OP-O)	1	◆
69	188-431-7	Driven Gear Spindle	1	◆
70	020-432-1	Driven Gear Collar	1	◆
71	020-433-1	Driven Gear Spacer	1	◆
72	562-391-7	Spindle Rear Cover	1	◆
73	179-488-6	Angle Casing Cover	1	◆
74	180-867-7	Front Casing Packing	1	◆
75	945-129-0	Allen Head Bolt (M5 x 25)	4	◆
76	945-949-0	Hexagonal Round Head Bolt (M5 x 6)	1	◆
77	954-206-0	Allen Head Cone Point Screw (M5 x 6)	1	◆
78	975-803-0	Adjusting Spacer (30 x 26 x T)	1	◆
79	975-836-0	Adjusting Spacer (36 x 325 x T)	1	◆
80	982-021-0	Ball Bearing (626)	1	◆
81	982-101-0	Ball Bearing (6001)	1	◆
82	982-904-0	Ball Bearing (6903)	2	◆
83	993-003-0	Felt-Ring (12 x 16 x 2)	1	◆
84	891-346-1	Driven Gear (OP-P)	1	◆
85	891-304-1	Socket Retainer Pin Assembly	1	◆
86	194-319-3	Anvil (OP-O)	1	❍
87	891-311-1	Anvil (OP-P)	1	❍
88	891-304-1	Socket Retainer Pin Assembly	1	❍
89	180-439-7	Front Casing	1	❍
90	188-328-2	Anvil Bushing	1	❍
91	966-100-0	Allen Head Plug (PT1/8)	1	❍
92	180-867-7	Front Casing Packing	1	❍

ACCESSORIES

96	939-104-0	Allen Wrench (5)	1
97	939-109-0	Allen Wrench (2)	1

AIMCO also offers a complete line of standard & special adapters, bits, sockets and extensions.

FOOTNOTES

◆ = Parts for UX-900C
❍ = Parts for UX-900S

When ordering spare parts, please specify tool type, part number and description.

AIMCO
10000 SE PINE, PORTLAND, OR 97216
503-254-6600 FAX 503-255-2615

REVISED 8/00